AccuGlide Mini Linear Ball Guides

Ultra compact, high roll moment capacity

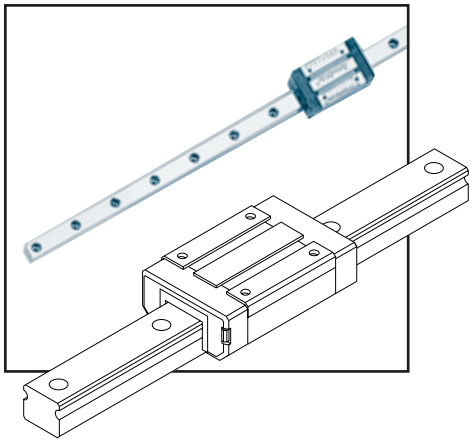

Thomson AccuGlide* Mini Linear Ball Guides offer:

- A ball control design for smooth, quiet, low friction at high speeds
- A full length integral wiper which protects important bearing from contaminants…effective system life is maximized
- A Gothic design, which provides high roll moment capacity... a requirement for stand-alone applications
- A resistant, engineered polymer retainer which reduces system inertia noise

Part Number Description and Specification

Miniature Carriage

CD 10 AA A H –

Type	Description
CD	AccuGlide* Mini

Size: 10, 15, 20

Style	Description
AA	Standard

Preload Designation	Description
A	Clearance
B	Approx. 0,03 C†

Accuracy Class
H = High P = Precision

Carriage Suffix
(See Chart Below)

† Where C=Dynamic Load Capacity

Miniature Rail

RD 10 H LXXXX – Y= (See Note 1 Below)

Type	Description
RD	AccuGlide Miniature

Size: 10, 15, 20

Accuracy Class
H = High P = Precision

Rail Length
XXXX (mm)

Rail Suffix
(See Chart Below)

Note 1 - Y= Distance from end of rail to center of 1st mounting hole

Product Options	Suffix	
	Carriage	Rail
Armoloy® Plating	-A	-A
Low Drag Seals (End Seals Only)	-LDS	-
Other Modifications (Dowel Holes, Special Lube Points, Special Lubricants, Other)	-MXXX (Contact Factory)	

For more information, or to place an order, please contact your local authorized Thomson distributor or Danaher Motion at 1-800-554-8466, Fax: 1-800-445-0329, or E-mail at profilerail@danahermotion.com.

DANAHER MOTION is a registered trademark of Danaher Corporation. Danaher Motion makes every attempt to ensure accuracy and reliability of the specifications in this publication. Specifications are subject to change without notice. Danaher Motion provides this information "AS IS" and disclaims all warranties, express or implied, including, but not limited to, implied warranties of merchantability and fitness for a particular purpose.It is the responsibility of the product user to determine the suitability of this product for a specific application. ©2004 Danaher Motion.